DO NOT SCALE
DIMENSIONS IN mm

METRIC

THIRD ANGLE PROJECTION

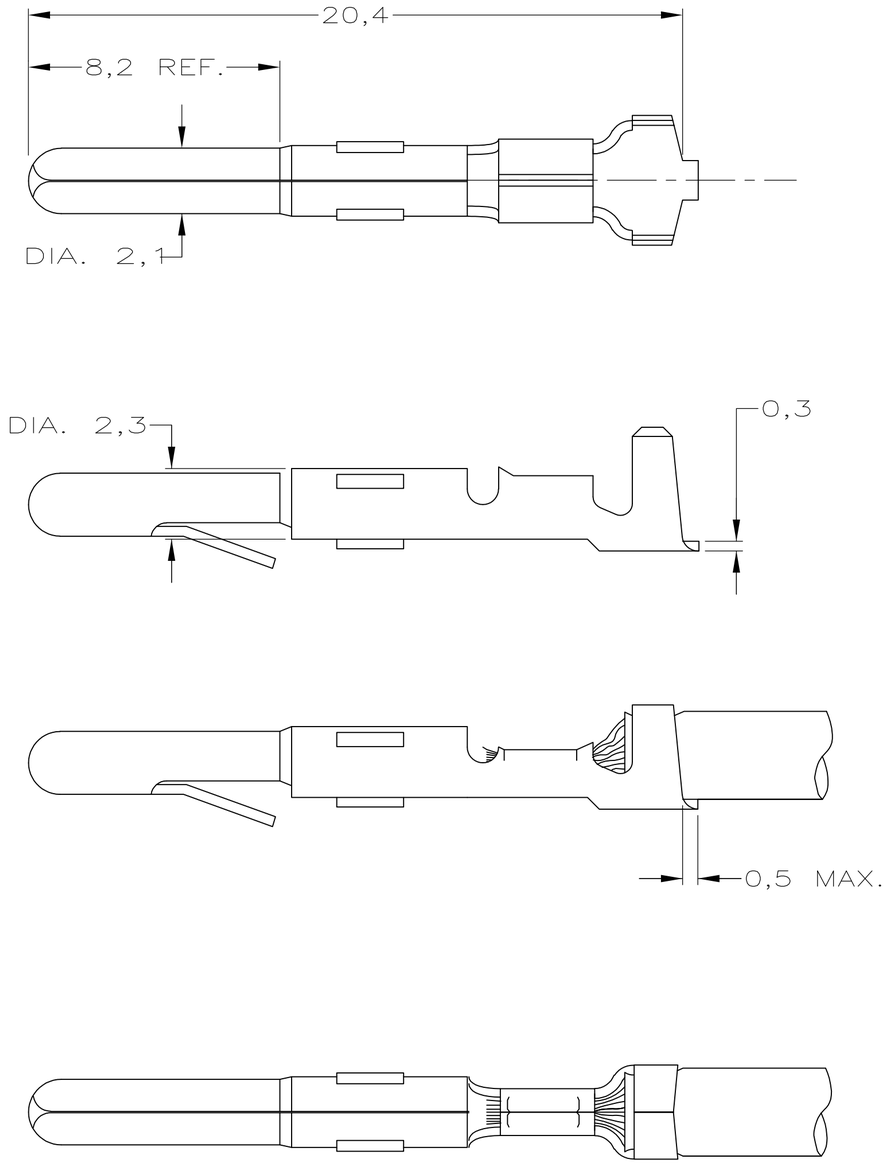

WIRE RANGE : 0,5–1,0mm
INSULATION RANGE : 1,8–3,3 DIA.

	–	–	–
		–	–
	–	–	–
	–	–	–
	–	–	–
	–	–	–
	–	–	–
	–	–	–
	PRE–TINPLATED	PHOSPHOR BR.	163305–4
	UNPLATED	PHOSPHOR BR.	163305–3
	PRE–TINPLATED	BRASS	163305–2
	UNPLATED	BRASS	163305–1
–	PLATING	MATERIAL	PARTNUMBER

LTR.	REVISION RECORD	DR.	CHK.	DATE
C1	REVISED PER ECO–11–005294	RK	HMR	05APR11

CUSTOMER DRAWING — FOR REFERENCE ONLY WILL NOT BE UPDATED

© COPYRIGHT – BY –
ALL INTERNATIONAL RIGHTS RESERVED.
THIS DRAWING IS UNPUBLISHED
~~RELEASED FOR PUBLICATION – ,19 –~~

TE Connectivity

NAME
PIN MATE–N–LOK.

DR.: J.v.LIEMPT	CHK.: A.BIJNEN.	APP.: M.v.DRIEL	DWG.No. C–163305	REV.LTR. C1	SHEET 1 OF 1	A3
DATE: 24 OCT 96	DATE: –	DATE: –				

R6–210 (REV.04–91)

8 7 6 5 4 3 2 1

F E D C B A